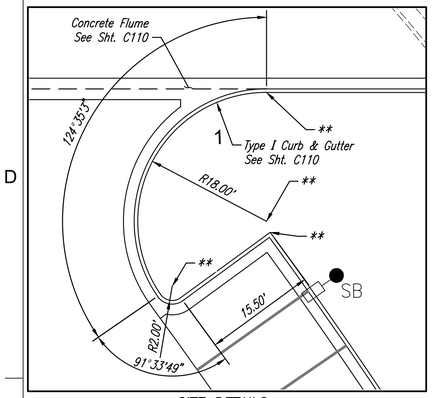

SITE DETAILS
ISLAND/AREA NO. 1

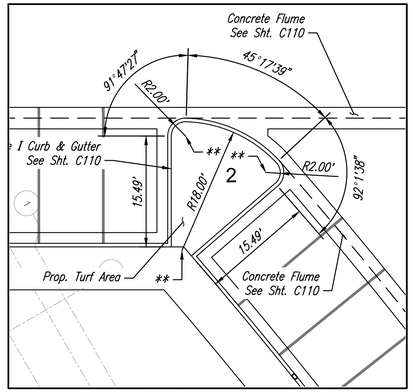

SITE DETAILS
ISLAND/AREA NO. 2

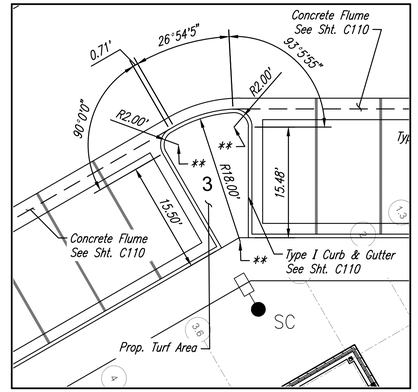

SITE DETAILS
ISLAND/AREA NO. 3

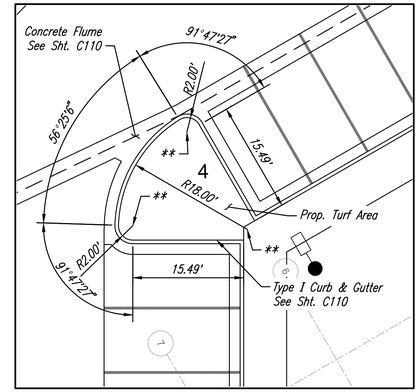

SITE DETAILS
ISLAND/AREA NO. 4

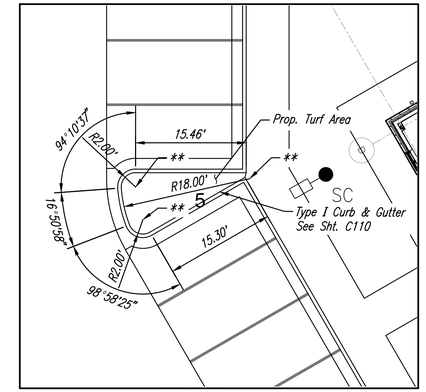

SITE DETAILS
ISLAND/AREA NO. 5

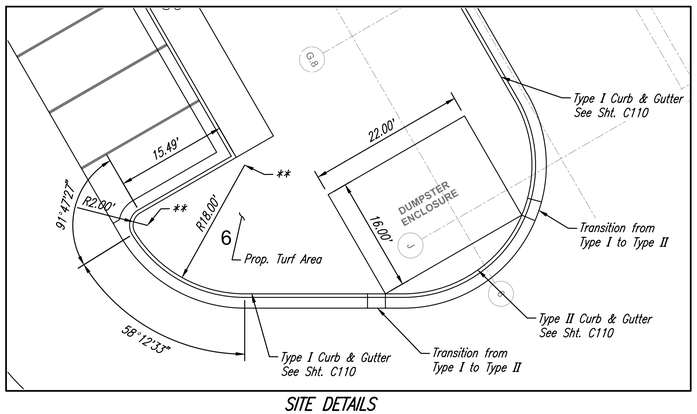

SITE DETAILS
ISLAND/AREA NO. 6

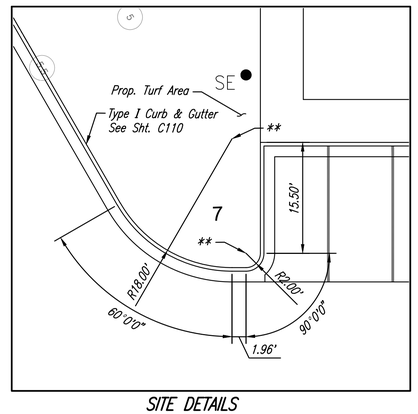

SITE DETAILS
ISLAND/AREA NO. 7

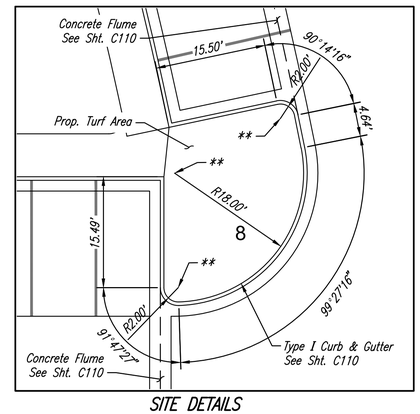

SITE DETAILS
ISLAND/AREA NO. 8

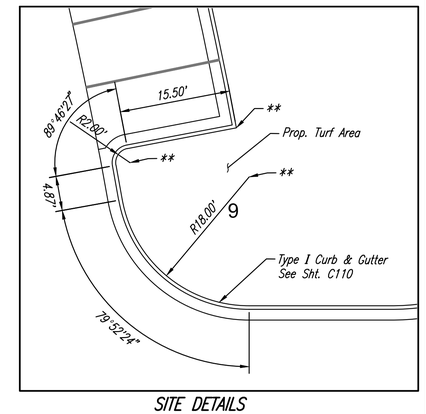

SITE DETAILS
ISLAND/AREA NO. 9

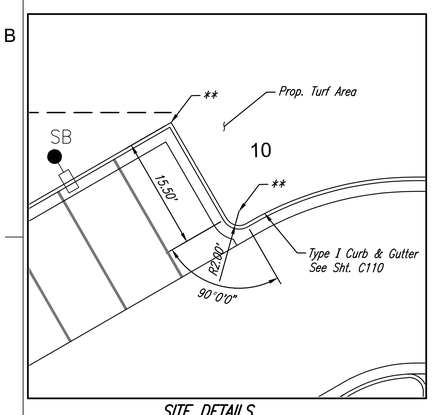

SITE DETAILS
ISLAND/AREA NO. 10

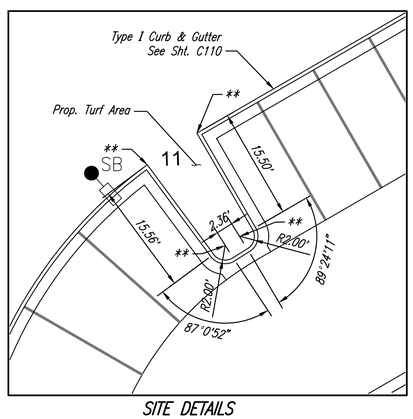

SITE DETAILS
ISLAND/AREA NO. 11

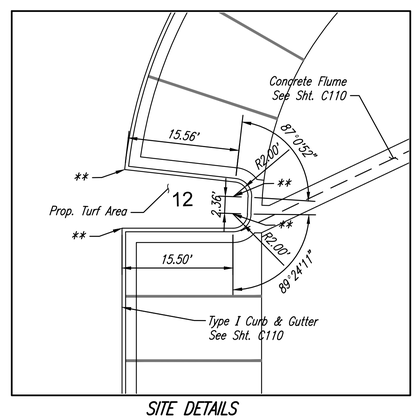

SITE DETAILS
ISLAND/AREA NO. 12

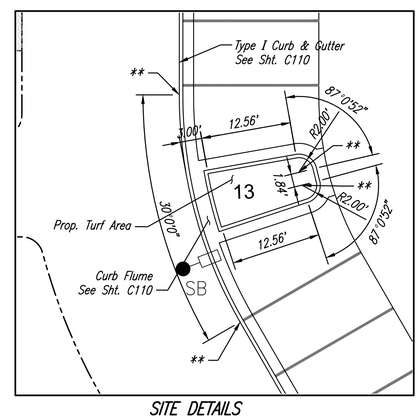

SITE DETAILS
ISLAND/AREA NO. 13

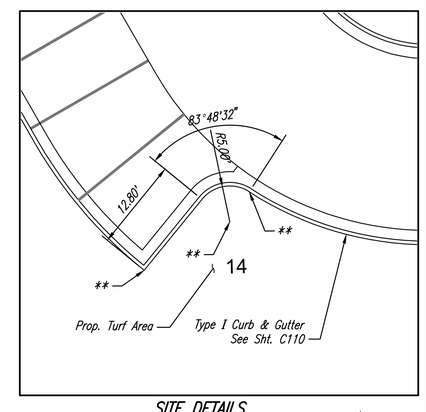

SITE DETAILS
ISLAND/AREA NO. 14

See Sheet C102 for Site Plan
See Sheets C105–C106 for Grading Plans & Details
See Sheets C107–C109 for Coordinate Layout Plans & Details
See Sheet C117 for Franchised Utility Plan
See Sheets C113–C115 for Water Line/Sanitary Sewer Plans
See Sheets C118–C126 for Storm Sewer Plans & Profiles

** – Coordinate Callout Point– See Shts C107–C109

NOTE: DRAWINGS AND SPECIFICATIONS ARE ORGANIZED FOR CONVENIENCE OF REFERENCE ONLY. THIS ORGANIZATION IS NOT INTENDED TO ESTABLISH THE SCOPE OF WORK OF ANY TRADE. THE WORK OF ANY GIVEN TRADE, SUPPLIER OR SUBCONTRACTOR MAY BE REPRESENTED IN DRAWINGS OR SPECIFICATION SECTIONS THAT CROSS OVER BETWEEN DESIGN DISCIPLINES AND MAY BE SHOWN ON OTHER DRAWINGS OR IN OTHER SPECIFICATION SECTIONS WITHIN THE CONTRACT DOCUMENTS. ESTABLISHING THE SCOPE OF ANY TRADE OR SUPPLIER IS THE RESPONSIBILITY OF THE CONTRACTOR. NEITHER THE OWNER NOR ARCHITECT WILL ESTABLISH THE LIMITS OR JURISDICTION OF ANY SUBCONTRACTOR.

10 0 5 10 20
Scale 1" = 10'

GLMV Architecture
9229 Ward Parkway, Ste. 210
Kansas City, MO 64114
Tel: (816) 444-4200
www.glmv.com

PEC
PROFESSIONAL ENGINEERING CONSULTANTS, P.A.
104 SOUTH PINE PITTSBURG, KS 66762
620-235-0195 www.pec1.com
STATE CERT. OF AUTHORITY NO. 000465
PEC PROJECT # 14E14-000

STATE OF MISSOURI
BRIAN COOMES
02/12/2016
NUMBER PE-2015029306
PROFESSIONAL ENGINEER

CONSTRUCTION DOCUMENTS

© 2016 GLMV Architecture, Inc.
All work herein is the exclusive property of GLMV Architecture, Inc. and is not to be copied or used in any way without the express written consent of GLMV Architecture, Inc. All drawings, specification, ideas, designs and arrangements appearing herein constitute the original and unpublished Work of: GLMV Architecture, Inc.

JOPLIN PUBLIC SAFETY TRAINING FACILITY

5102 SWEDE LANE, JOPLIN, MO

MARK	DATE	DESCRIPTION

SITE PLAN DETAILS

JOB NO.	13061.000
DATE	02-12-2016
DRAWN	BMC
CHECKED	BDR

C103

DWG. 8 OF 141

CONSTRUCTION DOCUMENTS

Saved 01-25-2016 2:48:12 PM by BMC
Plot Scale 1:1 02-12-2016 10:11:46 AM by BRIAN COOMES
U:\Pittsburg\2014\14E14\000\Main\Drawings\Plan Set\14E14-000_C-103 Site Plan Details